Marine Cast Iron Gate Valves 10K

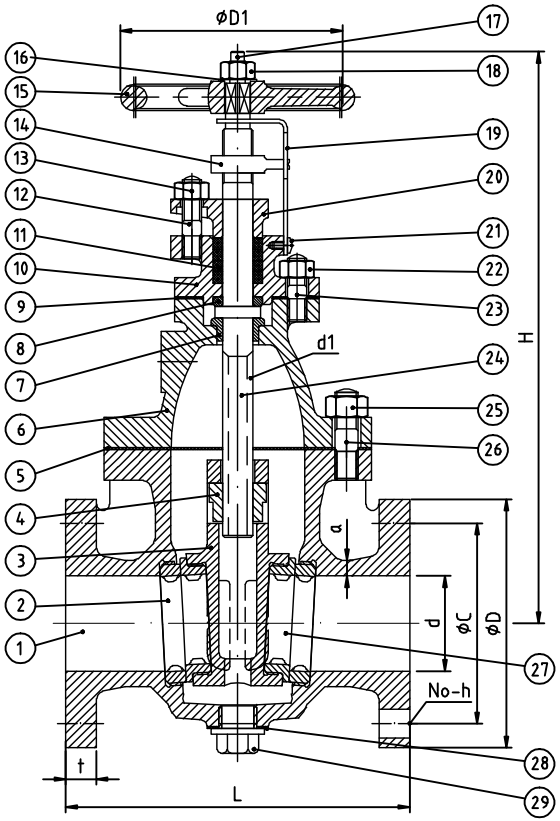

DN	d	L	D	C	No-h	t	H	D1	d1	a
50	50	200	155	120	4-19	20	300	140	Tr18	9
65	65	220	175	140	4-19	22	350	160	Tr20	10
80	80	230	185	150	8-19	22	400	180	Tr22	10
100	100	250	210	175	8-19	24	450	200	Tr24	11
125	125	270	250	210	8-23	24	520	224	Tr26	13
150	150	290	280	240	8-23	26	580	250	Tr28	14
200	200	320	330	290	12-23	26	700	315	Tr32	16
250	250	380	400	355	12-25	30	840	400	Tr38	18
300	300	440	445	400	16-25	32	960	450	Tr42	20
350	335	500	490	445	16-25	34	1050	500	Tr44	22
400	380	590	560	510	16-27	36	1150	560	Tr48	24

Technical Specification

Nominal Pressure	Strengh testing pressure	Seat testing pressure
10K	2.1MPa	1.54MPa

NO.	Description	Material	Remark
29	Plug	H62	
28	Asbestos Free	Expanded graphite	
27	Sealing ring	2Cr13	
26	Double Open end Bolt	Q235A	
25	Nut	Q235A	
24	Stem	2Cr13	
23	Double Open end Bolt	Q235A	
22	Nut	Q235A	
21	Bolt	Q235A	
20	Gland Packing	2Cr13	
19	Scale	H62	
18	Nut	Q235A	
17	Split pin	A3	
16	Cushion	Q235A	
15	Handwheil	HT200	
14	Staff	H62	
13	Nut	Q235A	
12	Double Open end Bolt	Q235A	
11	Graphite packing	Expanded graphite	
10	Packing box	HT200	
9	Asbestos Free	Expanded graphite	
8	Thrust pad	H62	
7	Thrust bush	H62	
6	valve cover	HT200	
5	Asbestos Free	Expanded graphite	
4	Square nut	H62	
3	Flash board	HT200	
2	Sealing ring	2Cr13	
1	Body	HT200	

Note	Handle	NO.	Sign	Date

Design	Fukewei	Review	
Calibrator	Fukewei	Approver	
Process		Date	2015.1.6

DRAWING

JIS 7364-10K

Note	QTY	Proportion

A total of 1 first

QingDao V-goal Marine Valve Manufacturing CO.,LTD.