Marine Bronze Globe Valves 16K

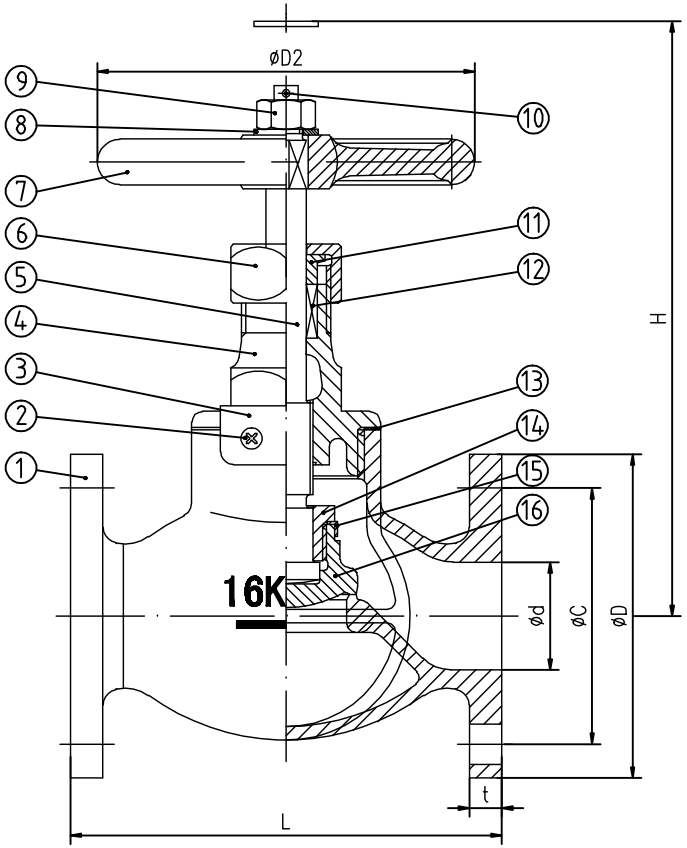

DN	d	L	D	C	No-h	t	H	D1	d1	a
15	15	110	95	70	4-15	12	130	80	Tr14	4
20	20	120	100	75	4-15	14	140	100	Tr16	4
25	25	130	125	90	4-19	14	160	125	Tr18	4
32	32	160	135	100	4-19	16	170	125	Tr18	5
40	40	180	140	105	4-19	16	190	140	Tr20	6

Technical Specification

Nominal Pressure	Strengh testing pressure	Seat testing pressure
16K	3.3MPa	2.42MPa

No.	Description	Material	Remark
16	Disc	H62	
15	Gasket	H62	
14	Disc Nut	H62	
13	Asbestos Free	Expanded Graphite	
12	Graphite Packing	Expanded Graphite	
11	Gland Packing	H62	
10	Split Pin	A3	Electroplating yellow
9	Nut	Q235A	Electroplating yellow
8	Gasket Ring	Q235A	Electroplating yellow
7	Handwhell	HT200	
6	Gland nut	H62	
5	Stem	H62	
4	Cover	ZCuSn5Pb5Zn5	
3	Check Washer	H62	
2	Srew	Q235A	Electroplating yellow
1	Body	ZCuSn5Pb5Zn5	

Note	Handle	NO.	Sign	Date

Design	Fukewei	Review	
Calibrator	Fukewei	Approver	
Process		Date	2015.1.8

DRAWING

JIS 7303-16K

Note	QTY	Proportion

A total of 1 first

QingDao V-goal Marine Valve Manufacturing CO.,LTD.