Marine Cast Steel Screw Down Checvk Globe Valves 10K

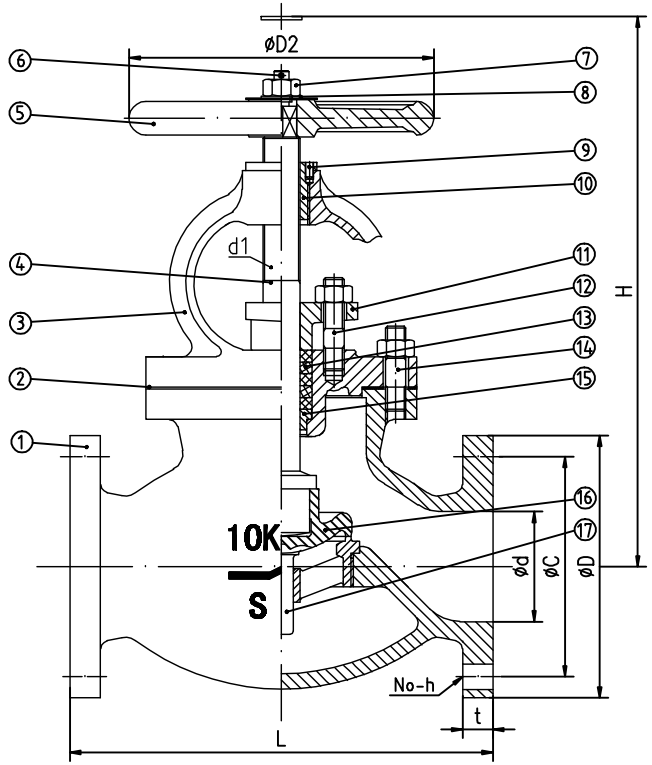

DN	d	L	D	C	No-h	t	H	D1	d1	a
50	50	220	155	120	4-19	16	265	160	Tr22	8
65	65	270	175	140	4-19	18	395	200	Tr24	9
80	80	300	185	150	8-19	18	300	200	Tr24	9
100	100	350	210	175	8-19	18	345	250	Tr28	11
125	125	420	250	210	8-23	20	405	280	Tr32	12
150	150	490	280	240	8-23	22	455	315	Tr36	13
200	200	570	330	290	12-23	22	545	355	Tr42	15

Technical Specification

Nominal Pressure	Strengh testing pressure	Seat testing pressure
10K	2.1MPa	1.54MPa

NO.	Description	Material	Remark
17	Disc	2Cr13	
16	Sealing Ring	2Cr13	
15	packing seat	H62	
14	Double Open end Bolt	Q235A	
13	Packing	Expanded graphite	
12	Double Open end Bolt	Q235A	
11	Gland Packing	2Cr13	
10	Screwed Bonnet Bush	H62	
9	Srew	Q235A	
8	Gasket Ring	Q235A	
7	Nut	Q235A	
6	Split Pin	A3	
5	Handwhell	HT200	
4	Stem	2Cr13	
3	Cover	ZG230-450	
2	Asbestos Free	Expanded graphite	
1	Body	ZG230-450	

Note	Handle	NO.	Sign	Date

Design	Fukewei	Review	
Calibrator	Fukewei	Approver	
Process		Date	2014.12

DRAWING

JIS 7471-10K

Note	QTY	Proportion

A total of 1 first

QingDao V-goal Marine Valve Manufacturing CO.,LTD.